TRW-400D KIT

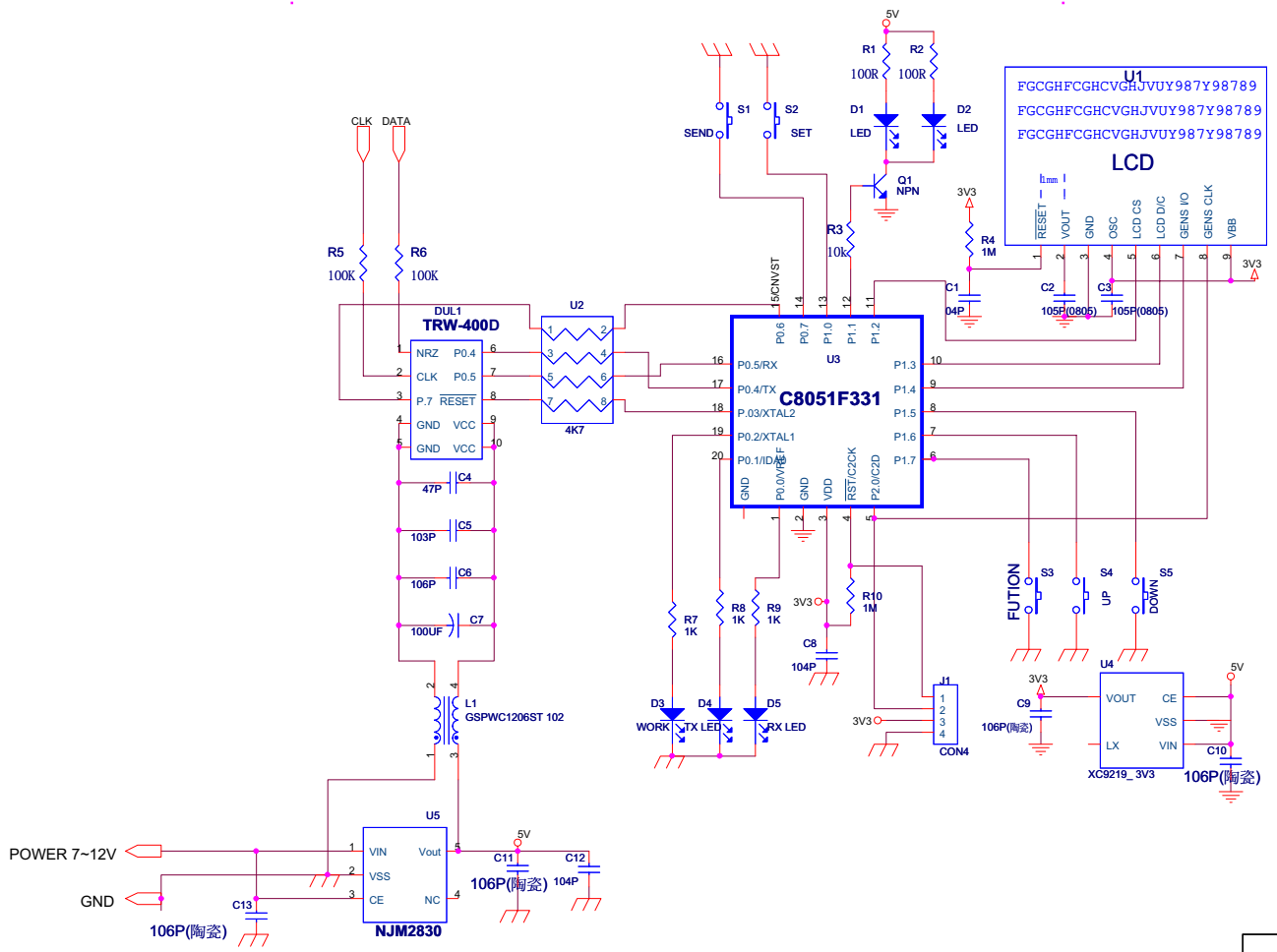

Title	WENSHING ELECTRO	
Size B	Document Number TRW-400B DEMO SCH	Rev B
Date: Friday, March 07, 2008	Sheet 1 of 1	